ZAC/ZSC/AR
Short cased axial fans

by Ziehl Abegg

- Sickle & aerofoil bladed fans, 200mm to 630mm
- Fan - single phase, 230V - 1Ph - 50Hz
- Diecast aluminium impellers (AR type Steel)
- Insulation class 'F' IP54 (AR type IP44)
- Operating range -40°C to 70°C
- Thermal protection 'TK'
- Galv steel casing with flanges
- Corrosion resistant paint ZAC/ZSC pebble Grey, (AR type Black)
- Inlet guard
- IP54 terminal box
- Maintenance free, sealed for life bearings

Single Phase Product Code	Speed rpm	Airflow m³/sec @ Static Pressure Pa			Motor Data			Weight	dBA @	Speed Control	
		50 Pa	100 Pa	125 Pa	FLC	SC	kW	Kg	3m	Elec	Trans
AR200-E2-K	2600	0.216	0.109	0.06	0.3	0.9	0.06	2.7	45	SC 1,5	RE 1,5
AR200-E4-K	1370	0.018	-	-	0.21	0.6	0.03	2.5	41	SC 1,5	RE 1,5
AR250-E2-K	2500	0.42	0.28	0.07	0.53	1.5	0.15	3.9	60	SC 1,5	RE 1,5
AR250-E4-K	1400	0.073	-	-	0.21	0.6	0.04	3.5	44	SC 1,5	RE 1,5
AR300-E2-K	2700	0.83	0.75	0.7	1.1	3.5	0.23	5.0	63	SC 1,5	RE 1,5
AR300-E4-K	1390	0.36	-	-	0.32	1.0	0.07	4.9	49	SC 1,5	RE 1,5
ZAC315-21	2650	0.985	0.92	0.881	2.1	6.0	0.47	10.2	61	N/A	RE 3,0
ZSC315-41	1400	0.5	-	-	0.59	1.5	0.13	6.5	46	SC 1,5	RE 1,5
ZSC350-41	1400	0.739	0.52	-	0.9	2.5	0.2	7.5	49	SC 1,5	RE 1,5
ZSC400-41	1320	1.143	0.888	0.626	1.35	2.9	0.31	10.3	51	SC 3,0	RE 3,0
ZSC450-41	1310	1.805	1.509	1.31	2.8	7.0	0.61	15.8	55	SC 3,0	RE 3,0
ZSC450-61	910	0.98	-	-	0.91	2.1	0.21	14.0	48	SC 1,5	RTRE 1,5
ZSC500-41	1210	2.248	1.876	1.61	3.4	7.4	0.77	16.6	53	SC 3,0	RTRE 3,0
ZSC500-61	890	1.354	-	-	1.25	2.4	0.29	14.4	47	SC 1,5	RTRE 1,5
ZAC560-41	1300	3.338	3.027	2.875	7.5	15.0	1.6	25.0	68	N/A	RTRE 7
ZAC560-61	880	1.923	-	-	1.95	4.6	0.43	16.5	55	SC 3,0	RTRE 3,0
ZAC630-61	880	2.77	-	-	2.7	5.3	0.6	19.8	59	SC 3,0	RTRE 3,0

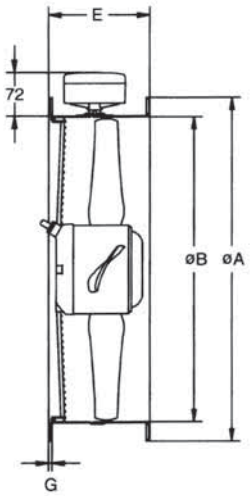

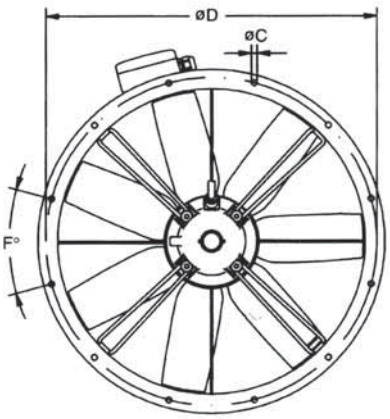

ZAC/ZSC
Short cased axial fans

by Ziehl Abegg

- Sickle & aerofoil bladed fans 315mm to 1000mm
- Fan - three phase, 400V - 3Ph - 50Hz
- Diecast aluminium impellers
- Insulation class 'F' IP54
- Operating range -40°C to 70°C
- Thermal protection 'TK'
- Galv steel casing with flanges
- Corrosion resistant paint ZSC/ZAC pebble grey
- Inlet guard
- IP54 terminal box
- Maintenance free, sealed for life bearings

Three Phase Product Code	Speed	Airflow m^3/sec @ Static Pressure Pa			Motor Data			dBA @ 3m	Speed Control Trans
	rpm	50 Pa	100 Pa	125 Pa	FLC	SC	kW		
ZSC315-43	1410	0.504	-	-	0.29	1.0	0.12	46	RTRD 2
ZSC350-43	1360	0.71	0.472	-	0.35	1.0	0.18	48	RTRD 2
ZSC400-43*	1300	1.11	0.842	0.515	0.48	1.35	0.27	50	RTRD 2
ZSC400-63*	970	0.716	-	-	0.29	0.78	0.18	46	RTRD 2
ZSC450-43*	1340	1.867	1.577	1.4	1.15	3.7	0.61	56	RTRD 2
ZSC450-63*	1000	1.318	-	-	0.72	1.25	0.41	50	RTRD 2
ZSC500-43*	1340	2.46	2.164	1.976	1.35	4.7	0.78	56	RTRD 2
ZSC500-63*	1000	1.75	-	-	0.94	1.6	0.55	49	RTRD 2
ZAC560-43	1300	3.1	2.66	2.405	1.8	7.0	1.0	63	RTRD 4
ZAC560-63	860	1.838	-	-	0.81	1.75	0.39	55	RTRD 2
ZAC630-43	1360	4.85	4.49	4.27	3.2	14.0	1.9	70	RTRD 4
ZAC630-63	880	2.826	-	-	1.5	3.6	0.7	60	RTRD 2
ZAC710-43	1350	6.53	6.18	5.99	4.9	23.0	2.9	70	RTRD 7
ZAC710-63	890	4.11	3.29	-	1.8	6.4	0.89	62	RTRD 2
ZAC800-63	900	5.75	4.85	4.1	2.7	9.8	1.4	62	RTRD 4
ZAC800-83	680	3.82	-	-	1.8	5.5	0.72	55	RTRD 2
ZAC1000-63	935	13.33	12.71	12.35	10.5	67.0	5.5	78	Inverter
ZAC1000-83	670	8.72	7.62	6.72	4.2	13.0	2.2	66	RTRD 7

* 4 Pole fan with two speed motor. Pre-wired Delta for high speed (4 pole). Change to Star configuration for 6 pole speed.

Cased axial dimensions

Size	ØA	ØB	ØC	ØD	E	ØF	G	kg
200	255	204	7	235	85	8	6	2,7
250	306	252	7	286	95	8	6	3,9
300	382	317	7	356	130	8	6	5
315	382	317	9,5	356	135	8	6	6,5
350	421	356	9,5	395	135	8	6	7,5
400	466	400	9,5	438	155	12	6	10,3
450	515	451	9,5	487	160	12	6	15,8
500	567	503	9,5	541	165	12	6	16,6
560	635	559	11,5	605	210	16	8	25
630	707	634	11,5	674	220	16	8	29
710	785	711	11,5	751	260	16	10	45
800	875	797	11,5	837	280	24	10	39
1000	1080	1001	11,5	1043	330	24	5	92

NOTE

Ancillary Packs available including:

- Mounting feet
- Flex conns
- Flanges
- Anti Vib Mounts
- Clips

Order Code:
AR ("Size") PK
e.g. AR 250 PK